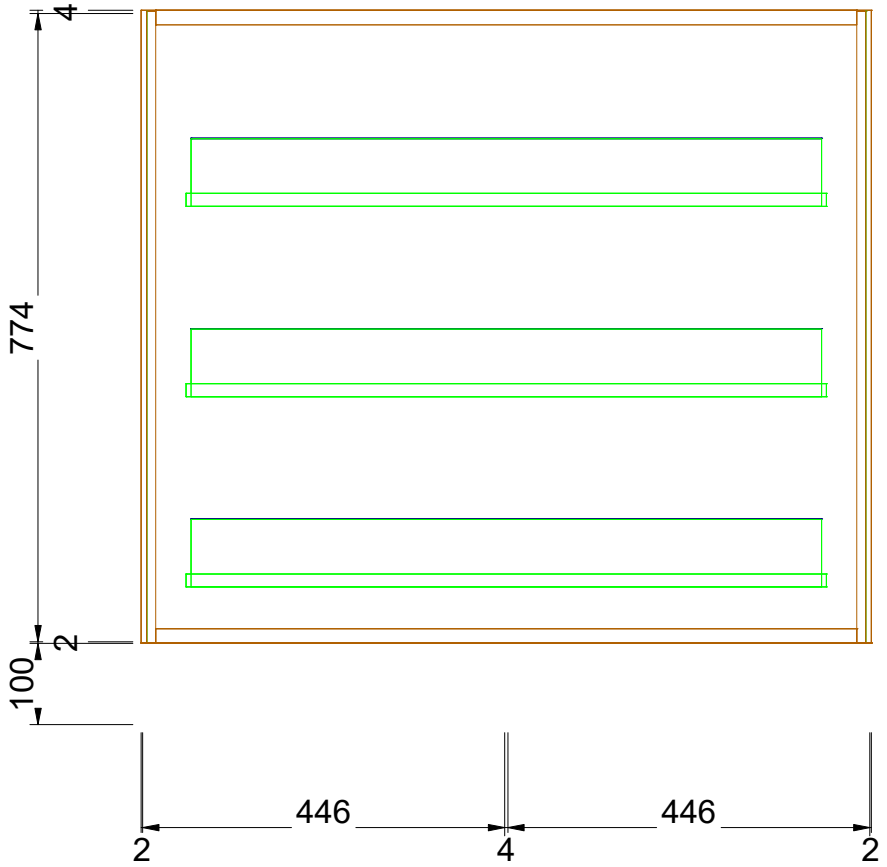

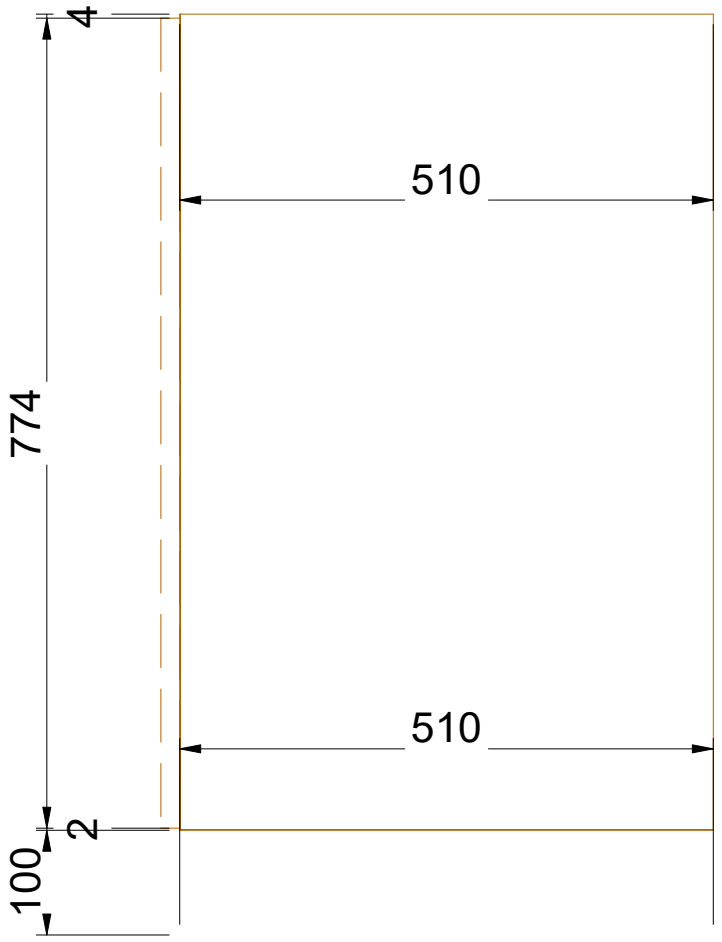

S90VZaaa

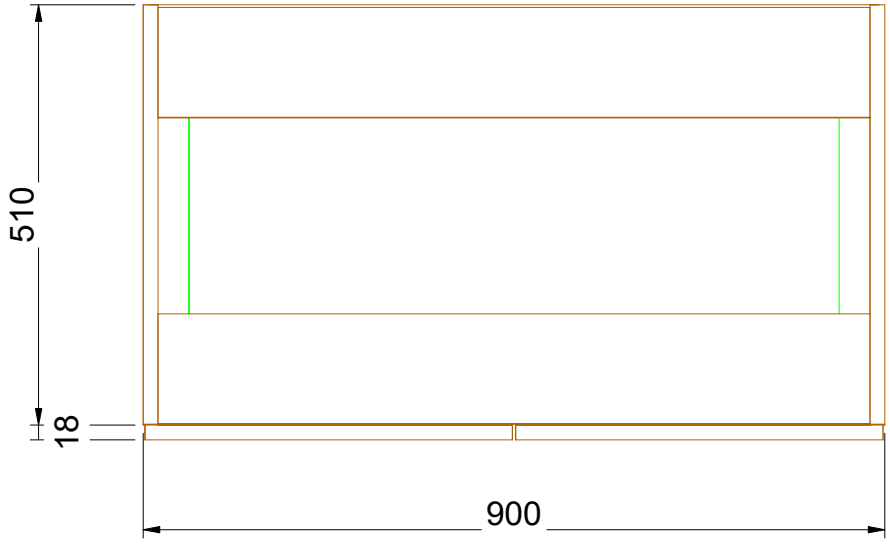

S90VZaaa

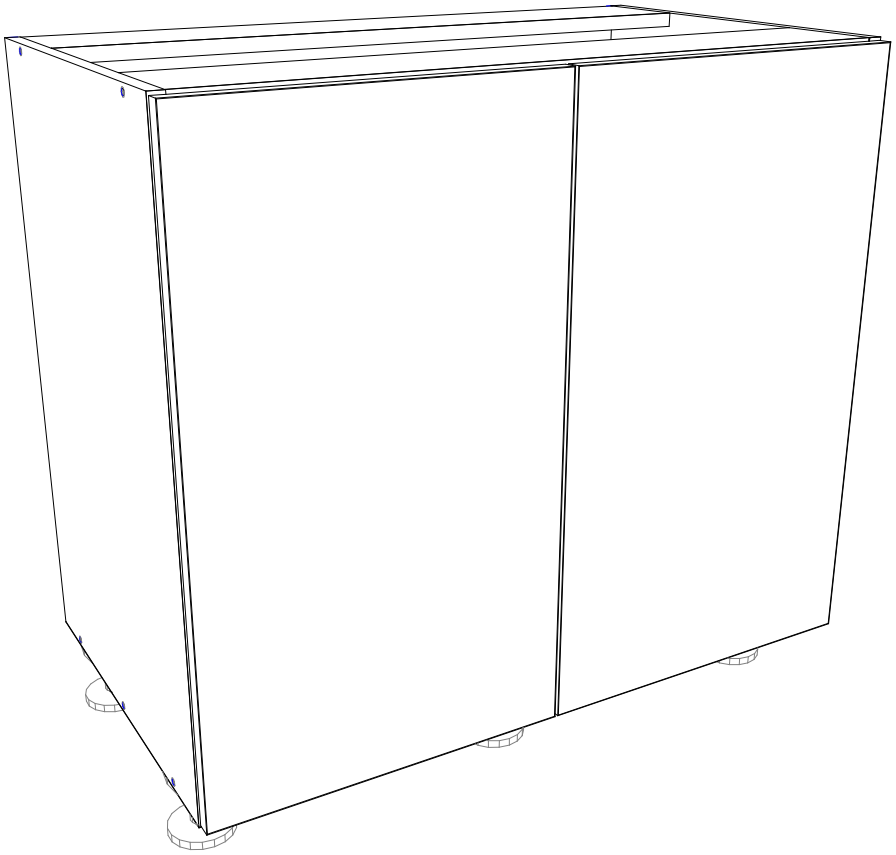

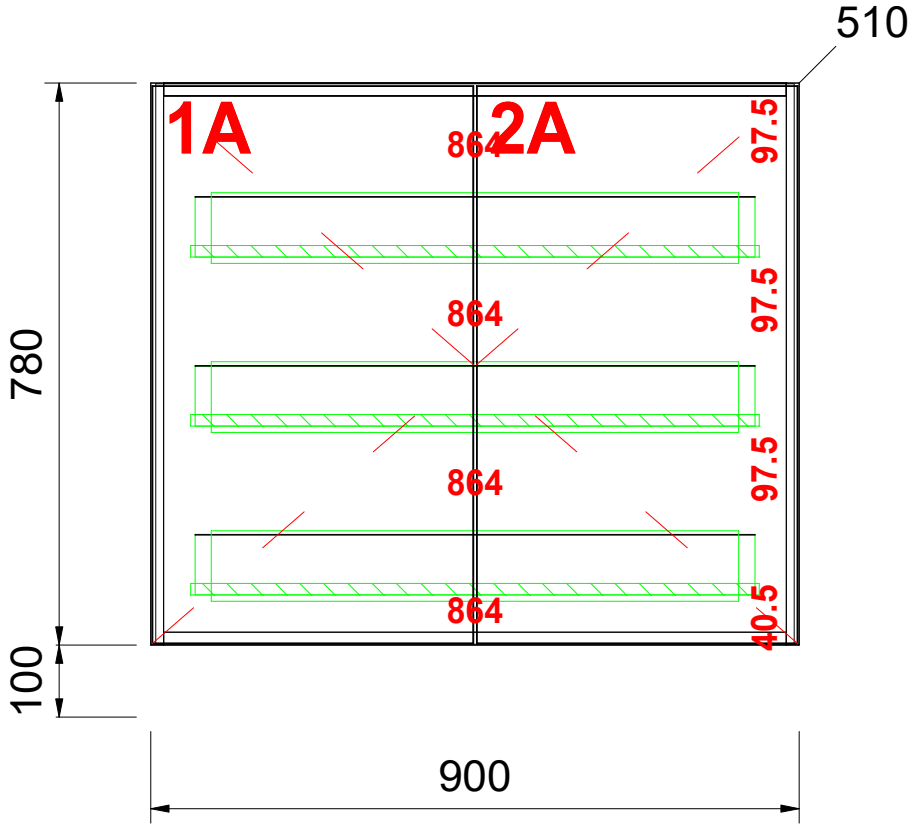

S90VZaaa